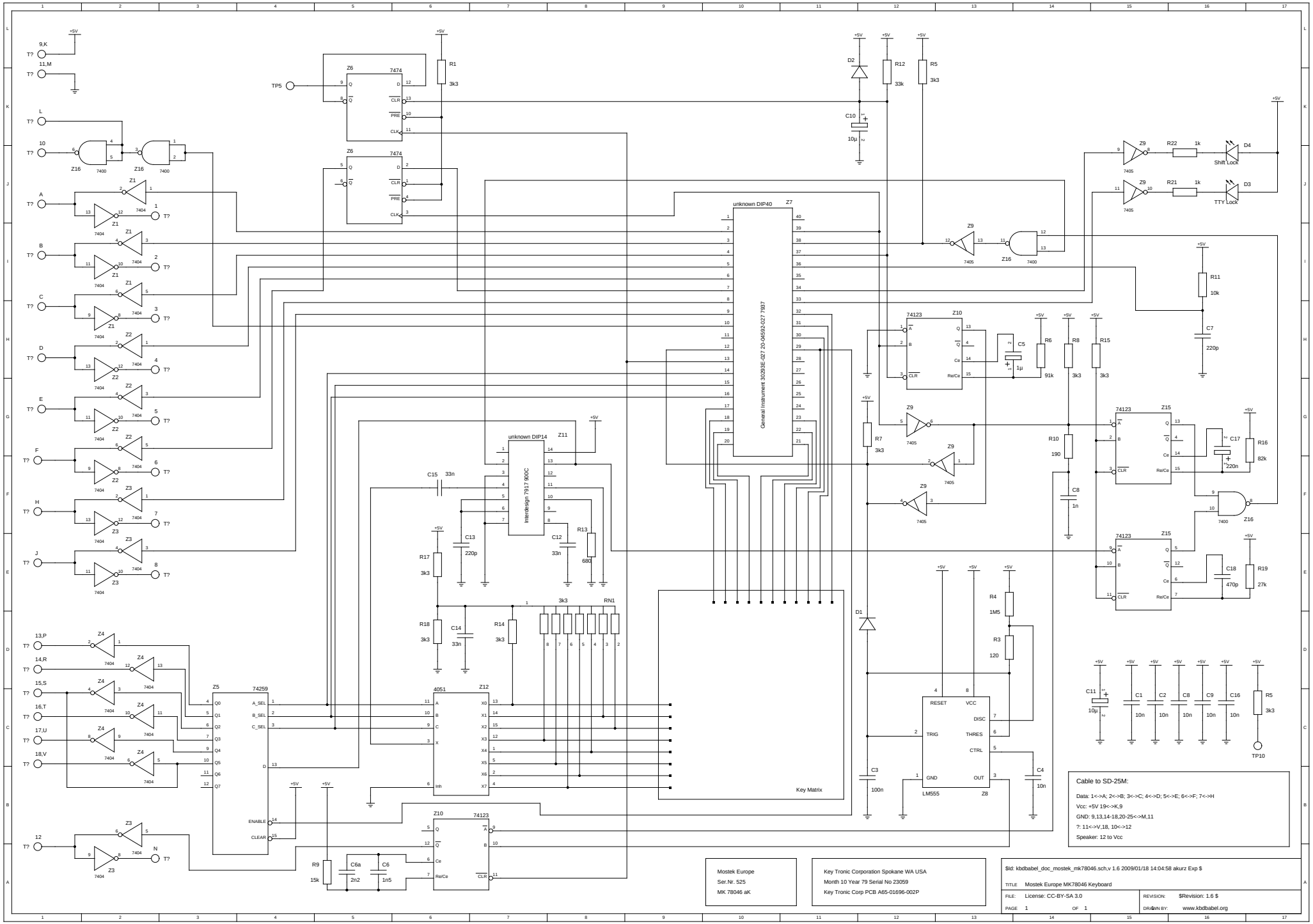
Z7
General Instrument 30293E-027 20-04592-027 7987
unknown DIP40
Z6
7474
Z5
74259
Z12
4051
Z10
74123
Z15
Z8
LM555
Z11
unknown DIP14
Interdesign 7917 900C
Key Matrix
Cable to SD-25M:
Data: 1<->A; 2<->B; 3<->C; 4<->D; 5<->E; 6<->F; 7<->H
Vcc: +5V 19<->K,9
GND: 9,13,14-18,20-25<->M,11
?: 11<->V,18, 10<->12
Speaker: 12 to Vcc
Mostek Europe
Ser.Nr. 525
MK 78046 aK
Key Tronic Corporation Spokane WA USA
Month 10 Year 79 Serial No 23059
Key Tronic Corp PCB A65-01696-002P
$Id: kbdbabel_doc_mostek_mk78046.sch,v 1.6 2009/01/18 14:04:58 akurz Exp $
TITLE: Mostek Europe MK78046 Keyboard
FILE: License: CC-BY-SA 3.0
REVISION: $Revision: 1.6 $
PAGE 1 OF 1
DRAWN BY: www.kbdbabel.org